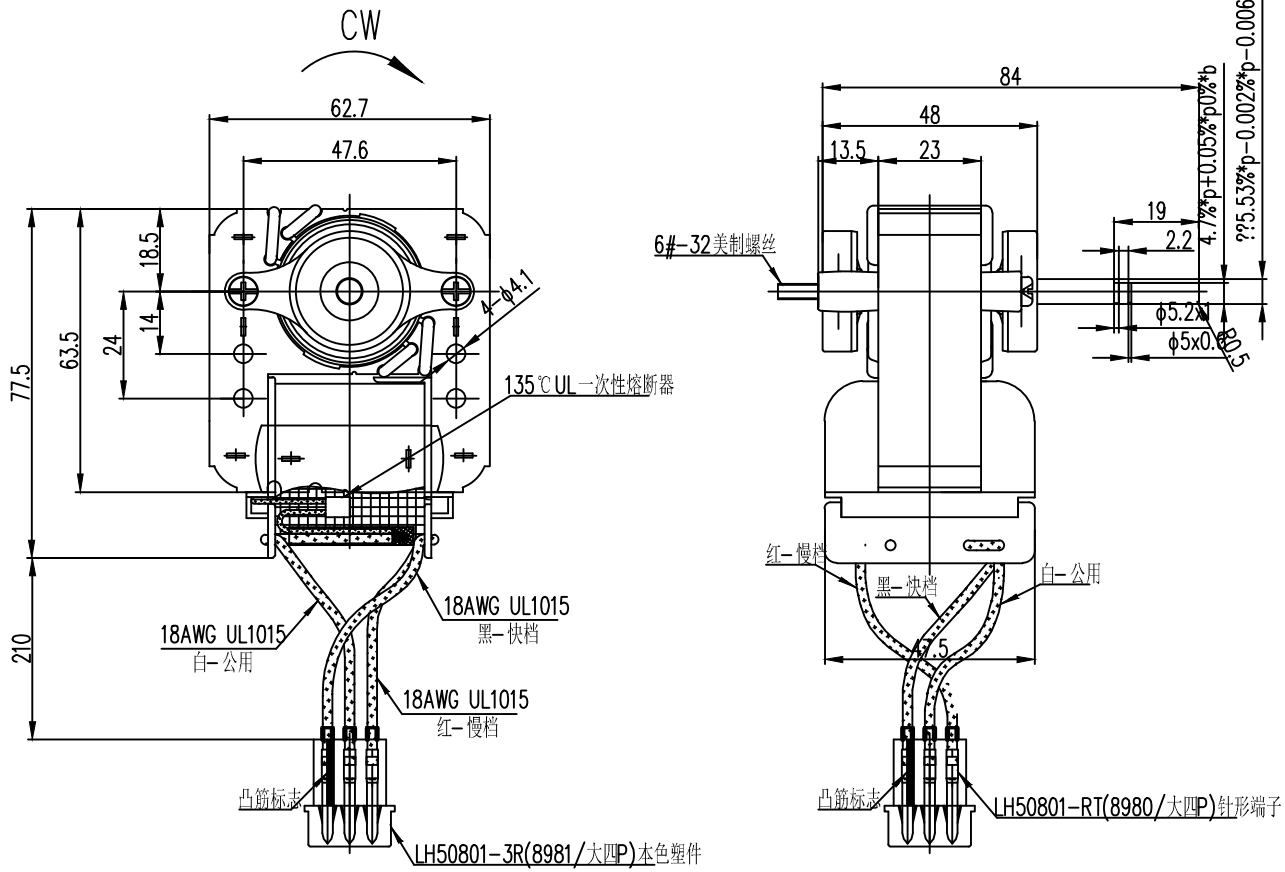

DRAWN BY :	
RESP ENGR :	
APPROVED BY:	
APPROVED BY:	GBJN3.137.473
APPROVED BY:	
UNLESS OTHEWISE SPECIFIED DIMENSIONS ARE IN INCHES TOLERANCES ARE:	
DECIMAL .XX ± .030 DECIMAL .XXX ± .005 DECIMAL .XXXX ± .0005 ANGULAR: ± 1° FRACTIONS: ± 1/64	常州五王电机有限公司

YJF61/23外形图
SM551/ERM551

CAGE CODE	PART NUMBER	REV
SCALE	DO NOT SCALE DRAWING	SHEET NO